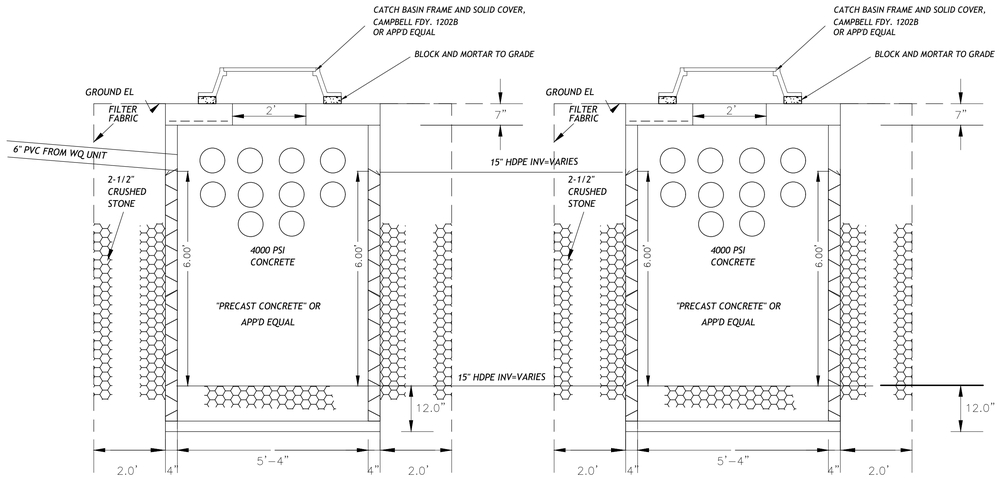

SEEPAGE PIT SYSTEM DETAIL

1/2" = 1'-0"

SEEPAGE PIT MAINTENANCE NOTES

1. *SEEPAGE PITS SHALL BE MAINTAINED BY THE OWNERS OF THE LOT ON WHICH THEY ARE SITUATED.*
2. *SAID OWNERS SHALL INSPECT SEEPAGE PITS ON A TWICE YEARLY BASIS AND REMOVE ANY ACCUMULATED SEDIMENT (OR AFTER ANY SIGNIFICANT STORM).*
3. *IF EVIDENCE PERSISTS THAT THE SEEPAGE PITS ARE NOT FUNCTIONING PROPERLY (I.E. WATER BACKING-UP IN SYSTEM, ETC.), THE OWNERS SHALL INSPECT THE PITS AS SOON AS REASONABLY POSSIBLE AND MAKE NECESSARY REPAIRS TO ENSURE PROPER FUNCTION OF THE SYSTEM.*

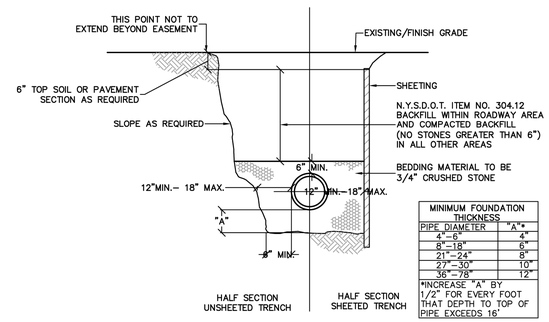

MINIMUM FOUNDATION THICKNESS	
PIPE DIAMETER	"A"*
4"–6"	4"
8"–18"	6"
21"–24"	8"
27"–30"	10"
36"–78"	12"

*INCREASE "A" BY 1/2" FOR EVERY FOOT THAT DEPTH TO TOP OF PIPE EXCEEDS 16'

SANITARY TRENCH IN EARTH DETAIL
R.C.S.D. NO.1
N.T.S.

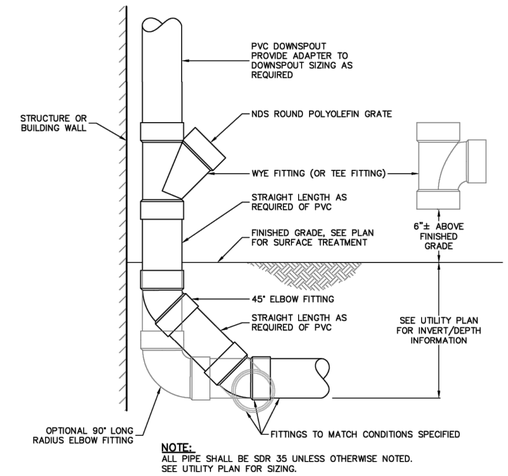

NOTE:
ALL PIPE SHALL BE SDR 35 UNLESS OTHERWISE NOTED.
SEE UTILITY PLAN FOR SIZING.

ROOF LEADER CLEANOUT DETAIL
N.T.S.

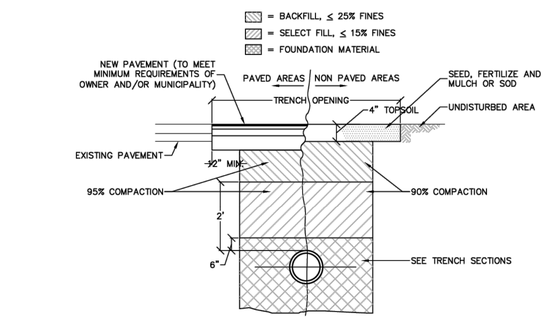

PIPE TRENCH BACKFILL DETAIL
R.C.S.D. NO.1
N.T.S.

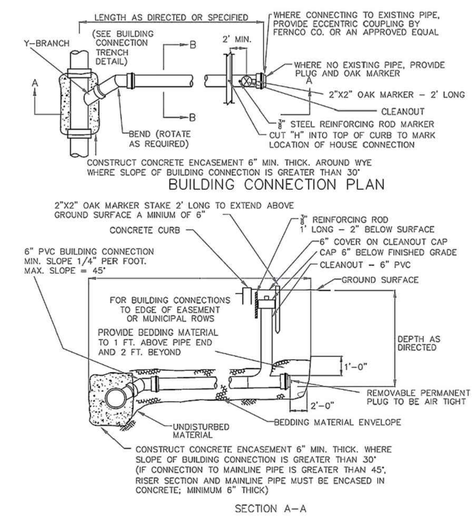

ROCKLAND COUNTY
SEWER DISTRICT NO. 1
BUILDING CONNECTION DETAIL
N.T.S.
02/01/02

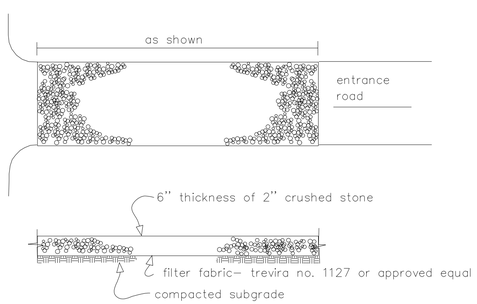

STABILIZED CONSTRUCTION ENTRANCE – WHEEL CLEANING BLANKET

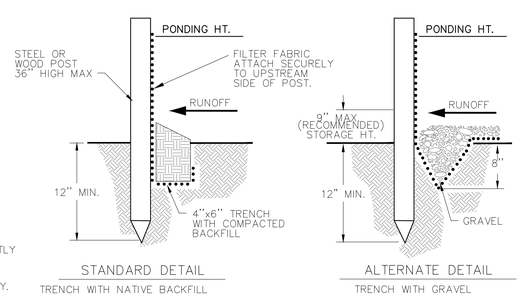

STANDARD DETAIL
TRENCH WITH NATIVE BACKFILL

ALTERNATE DETAIL
TRENCH WITH GRAVEL

NOTE:
1. INSPECT AND REPAIR FENCE AFTER EACH STORM EVENT AND REMOVE SEDIMENT WHEN NECESSARY.
2. REMOVED SEDIMENT SHALL BE DEPOSITED TO AN AREA THAT WILL NOT CONTRIBUTE SEDIMENT OFF-SITE AND CAN BE PERMANENTLY STABILIZED.
3. SILT FENCE SHALL BE PLACED ON SLOPE CONTOURS TO MAXIMIZE POUNDING EFFICIENCY.

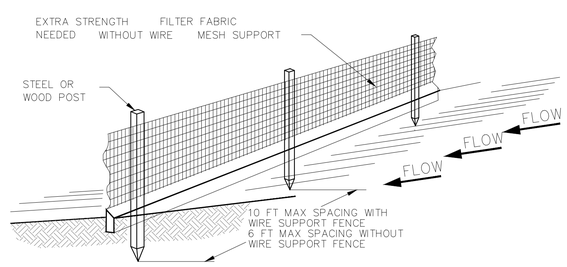

SILT FENCE
n.t.s.

DO NOT SCALE PRINTS

REVISIONS:

REVISIONS:

DATE: 16 FEB 2026
SCALE: AS NOTED
SHEET: D-1

PROPOSED RENOVATION

NEW HOUSE - TYPICAL DETAILS

RODI BUILDER I LLC
124 FIFTH AVENUE
NYACK, NEW YORK

BART M. RODI - ENGINEER
RESIDENTIAL & COMMERCIAL
234 SOUTH GRANT AVE
CONGERS, NEW YORK 10920
(845) 268-6663

NYS LIC #070545
PLANS VALID ONLY IF SEALED